Design and Implementation of Low-Power Decoder Architectures Using Mixed-Logic and Power Gating Techniques

Thesis submitted to

National Institute of Technology Agartala

for the award of the degree

of

Bachelor of Technology (B.Tech)

by

Mr. Debanik Debnath (Enrolment No: 22UEC015)

MS. Malavath Sravanthi (Enrolment No: 22UEC120)

Mr. Debarshi Ganguly (Enrolment No: 22UEC028)

Under the Supervision of

Dr. Abhishek Nag

Assistant Professor

ECE Department, NIT Agartala

DEPARTMENT OF ELECTRONICS AND COMMUNICATION ENGINEERING

NATIONAL INSTITUTE OF TECHNOLOGY AGARTALA

April - 2026

Dedicated

To

“Our Parents and Families”

APPROVAL SHEET

This thesis entitled "Design and Implementation of Low Power Strategy in Decoders" by Student Name 1 and Student Name 2 and Student Name 3 is approved for the degree of Bachelor of Technology.

Examiners

_____

_____

_____

_____

Supervisor

_____

Chairman

_____

Date: 27 April, 2026

Place: ECE, NIT AGARTALA

DECLARATION

We declare that this written submission represents our work in our own words and that where the ideas or words of others have been included, they have been adequately cited and referenced. We also declare that we have adhered to the principles of academic honesty and integrity and have not misrepresented, fabricated, or falsified any idea, data, fact, or source in this submission.

_____

Mr.Debanik Debnath

Enrollment No.22UEC015

_____

MS.Sravanthi Malavath

Enrollment No.: 22UEC120

_____

Mr.Debarshi Ganguly

Enrollment No.: 22UEC028

Date: 27 April, 2026

CERTIFICATE

It is certified that the work contained in the thesis entitled "Design and Implementation of Low Power Strategy in Decoders" by Mr. Debanik Debnath (22UEC015), Ms. Sravanthi Malavath (22UEC120) and Mr. .Debarshi Ganguly (22UEC028) has been carried out under my supervision and that this work has not been submitted elsewhere for a degree.

Dr. Abhishek Nag

Assistant Professor

Department of Electronics and Communication Engineering

N.I.T. Agartala

27 April, 2026

PREFACE

With the rapid advancement of VLSI technology, designing low power digital circuits has become a critical requirement in modern electronic systems. Decoders are essential combinational circuits widely used in applications such as memory addressing, data selection, and control systems. However, as circuit complexity increases, power dissipation and thermal issues pose significant challenges, affecting the performance, reliability, and efficiency of integrated circuits.

This project focuses on the design and implementation of low power strategies in decoder circuits using 2:4 and 4:16 decoders. The 2:4 decoder is designed as the fundamental building block, and the 4:16 decoder is implemented by cascading multiple 2:4 decoders. The circuits are designed and simulated using LTspice, and the output waveforms are analyzed to verify correct functionality and performance.

To achieve low power operation, optimization techniques such as reduction of switching activity, efficient transistor sizing, and logic optimization are applied. The simulation results demonstrate the effectiveness of the proposed design in reducing power consumption while maintaining correct decoding operation. The measured average power values from the simulation validate the improvement in power efficiency.

This project emphasizes the importance of power-aware design methodologies in modern VLSI systems and provides a practical approach to designing energy-efficient decoder circuits. The techniques used in this work can be extended to other digital circuits for developing low power and high-performance electronic systems.

ACKNOWLEDGEMENT

We would like to express our sincere gratitude to our supervisor, Dr. Abhishek Nag, for continuous guidance, encouragement, and valuable suggestions throughout the course of this project work.

We are also deeply grateful to our Project Coordinator, Dr. Apangshu Das, for his constant encouragement and support during the project execution.

We are also thankful to the faculty members and staff of the Department of Electronics and Communication Engineering, National Institute of Technology Agartala, for providing the academic environment and support necessary to complete this work.

Finally, we extend heartfelt thanks to our parents, family members, and friends for their patience, confidence, and moral support during the preparation of both the prototype and this thesis.

Mr. Debanik Debnath

(Enrollment No. 22UEC015)

Ms. Sravanthi Malavath

(Enrollment No. 22UEC120)

Mr.Debarshi Ganguly

(Enrollment No. 22UEC028)

ABSTRACT

With the increasing demand for energy-efficient VLSI systems, reducing power consumption in digital circuits has become a major design challenge. Decoders are fundamental combinational blocks widely used in memory addressing, control logic, and data selection, and their power dissipation directly affects the overall efficiency of integrated systems. This thesis presents the design and implementation of low-power 2-to-4 and 4-to-16 decoders using a mixed-logic strategy for transistor reduction and power optimization.

The proposed 2-to-4 high-performance decoder is implemented using Transmission Gate Logic (TGL), Dual-Value Logic (DVL), and Static CMOS, resulting in a 15-transistor architecture instead of the conventional 20-transistor CMOS design. In a similar way, the 4-to-16 high-performance decoder is developed using a predecoding approach based on two 2-to-4 mixed-logic blocks and sixteen 2-input Static CMOS NOR gates, leading to a 94-transistor design compared to the conventional 104-transistor benchmark.

The designs are simulated in LTspice using 32 nm Predictive Technology Model (PTM) low-power technology at a supply voltage of 1.0 V. The simulation results confirm correct decoding operation with full-swing logic levels. The proposed 4-to-16 decoder achieves an average power consumption of 1.945406 µW, showing a significant improvement over the conventional CMOS implementation. The results demonstrate that mixed-logic decoder design is an effective technique for reducing area and power while maintaining functional correctness and stable operation.

Content Table

Table of Contents **Page No.**

CHAPTER 1: INTRODUCTION

1.1 Motivation 11

1.2 Technology Scaling 12

1.3 Power Dissipation in CMOS Circuits 12

1.4 Low-Power Design Approaches 12

1.5 Problem Statement 13

1.6 Objectives of the Work 13

1.7 Scope of the Work 13-14

1.8 Organization of the Thesis 14

CHAPTER 2: LITERATURE REVIEW

2.1 Introduction 15

2.2 Conventional CMOS Decoder Design 16

2.3 Mixed-Logic Design Techniques..... 17-18

2.4 Power Dissipation Reduction Techniques..... 18

2.5 Power Gating Techniques 19

2.6 Decoder Design Optimization 20

2.7 Comparative Analysis of Existing Techniques 20

2.8 Research Gap 21

2.9 Contribution of the Present Work…….21

2.10 Summary……22

CHAPTER 3: SYSTEM REQUIREMENTS AND OVERALL ARCHITECTURE

3.1 Functional Requirements 22-24

3.2 Non-Functional Requirements and Constraints 24-25

3.3 System Architecture Overview 25

3.4 Block Diagrams……...25-29

3.5 Chapter Summary……29

CHAPTER 4: IMPLEMENTATION AND ANALYSIS

4.1 Introduction 26

4.2 M.ixed-Logic Decoder Implementation 26-27

4.3 Power-Gated Decoder Implementation.....27

4.4 Simulation and Measurement 27

4.5 Results and Discussion 28

4.6 Simulation Results and Waveforms 29-35

4.7 Chapter Summary 36

CHAPTER 5: RESULTS AND DISCUSSION

.1 Introduction..... 37

5.2 Mixed-Logic Decoder Results…….……37

5.3 Power-Gated Decoder 5Results…….……. 38

5.4 Comparative Discussion…….… 38

5.5 Key Observations……38-39

5.6 Chapter Summary……...……..39

CHAPTER 6: CONCLUSION AND FUTURE SCOPE

6.1 Conclusion 40

6.2 Future Scope 41

References 42

CHAPTER 1

INTRODUCTION

1.1 Motivation

The continuous advancement of Very Large Scale Integration (VLSI) technology has enabled the integration of billions of transistors on a single chip, resulting in highly compact and high-performance electronic systems. However, this rapid scaling has introduced critical challenges, particularly in terms of power consumption, power density, and thermal management. As technology scales into deep nanometer regimes, leakage currents increase and switching activity intensifies, leading to significant power dissipation and heat generation.

Modern applications such as portable electronics, embedded systems, and high-performance processors demand energy-efficient circuit designs to ensure longer battery life, reduced cooling requirements, and improved reliability. Among the fundamental building blocks of digital systems, decoders are widely used in memory addressing, instruction decoding, and control logic. Since decoders are frequently replicated in large-scale integrated circuits, their power consumption has a direct impact on overall system efficiency.

Therefore, minimizing power consumption in decoder circuits is a critical objective in modern VLSI design. This work is motivated by the need to develop efficient decoder architectures that reduce power, area, and switching activity while maintaining correct functionality and acceptable performance.

1.2 Technology Scaling and Power Challenges

Technology scaling has significantly improved circuit performance and integration density. According to Moore's Law, the number of transistors on a chip doubles approximately every eighteen months, enabling more complex functionalities. However, this scaling also results in increased leakage currents, reduced threshold voltages, and higher power density.

As device dimensions shrink, dynamic power consumption decreases due to reduced capacitance and supply voltage. However, static power consumption increases significantly due to leakage mechanisms such as sub-threshold leakage and gate oxide tunneling. Additionally, higher transistor density leads to localized hotspots, which degrade reliability and performance.

These challenges highlight the importance of power-aware and thermal-aware design methodologies in modern VLSI systems.

1.3 Power Dissipation in CMOS Circuits

Power dissipation in CMOS circuits is broadly classified into dynamic power and static power.

1.3.1 Dynamic Power Dissipation

Dynamic power is the dominant component in active circuits and is caused by the charging and discharging of load capacitances during switching. It depends on switching activity, capacitance, supply voltage, and operating frequency. Excessive switching activity in combinational circuits like decoders contributes significantly to overall power consumption.

1.3.2 Static Power Dissipation

Static power arises from leakage currents when transistors are in the OFF state. With aggressive scaling, leakage power has become a major concern, especially during idle

conditions. Reducing leakage power is essential for improving energy efficiency in modern circuits.

1.4 Low-Power Design Approaches

To address power-related challenges, various low-power design techniques have been developed. In this work, two complementary approaches are explored:

1.4.1 Mixed-Logic Optimization Approach

The first approach focuses on reducing transistor count and switching activity using a mixed-logic design methodology. This technique integrates Transmission Gate Logic (TGL), Dual-Value Logic (DVL), and Static CMOS to create an optimized decoder architecture.

By eliminating redundant complementary structures and directly utilizing input signals, the proposed design achieves significant area reduction. The 2-to-4 decoder is implemented using only 15 transistors compared to 20 in conventional CMOS designs. This optimized block is further extended to a 4-to-16 decoder using a hierarchical predecoding architecture, reducing overall transistor count and parasitic capacitance.

This approach primarily targets reduction in dynamic power and area while maintaining full-swing output and functional correctness.

1.4.2 Power Gating Approach

The second approach focuses on reducing static power using power gating techniques. Power gating introduces a sleep transistor (header PMOS) between the power supply and the circuit, effectively disconnecting the circuit during idle conditions.

When the circuit is active, the sleep transistor is turned ON, allowing normal operation. During idle mode, the transistor is turned OFF, reducing leakage currents and minimizing static power dissipation.

Experimental results obtained from LTspice simulations demonstrate the effectiveness of this approach. The conventional decoder consumes approximately 5.27×10^{-7} W, whereas the power-gated decoder reduces the consumption to approximately 3.118×10^{-7} W. This corresponds to an approximate 40% reduction in power consumption, confirming the efficiency of the power gating technique.

1.5 Problem Statement

The primary challenge addressed in this work is the design of decoder circuits that achieve an optimal balance among power consumption, transistor count, propagation delay, and signal integrity.

Conventional CMOS decoders provide reliable operation but suffer from higher transistor count and power consumption. Mixed-logic designs reduce area and dynamic power but may introduce delay trade-offs. Power gating reduces leakage power but requires careful design to maintain performance and stability.

Therefore, the objective is to develop and analyze decoder architectures that integrate both mixed-logic optimization and power gating techniques to achieve improved overall efficiency.

1.6 Objectives of the Work

The main objectives of this thesis are:

- To design a low-power 2-to-4 decoder using mixed-logic techniques
- To implement a scalable 4-to-16 decoder using hierarchical architecture

- To reduce transistor count compared to conventional CMOS designs
- To implement power gating for leakage power reduction
- To analyze and compare power consumption between conventional and optimized designs
- To validate the designs using LTspice simulations

1.7 Scope of the Work

This work focuses on circuit-level optimization of decoder designs using mixed-logic and power gating techniques. The study is limited to 2-to-4 and 4-to-16 decoders simulated using LTspice with 32 nm Predictive Technology Model (PTM) technology.

Performance evaluation is carried out based on parameters such as power consumption, transistor count, propagation delay, and logic swing. The results demonstrate improvements achieved through both optimization strategies.

1.8 Organization of the Thesis

The thesis is organized as follows:

- Chapter 1 presents the introduction and background of the work
- Chapter 2 discusses the literature review
- Chapter 3 explains system architecture and design methodology
- Chapter 4 covers implementation and analysis
- Chapter 5 presents results and discussion
- Chapter 6 concludes the work and outlines future scope

This structure provides a comprehensive understanding of low-power decoder design using both mixed-logic and power gating approaches.

CHAPTER 2

LITERATURE REVIEW

2.1 Introduction

The growing demand for energy-efficient electronic systems has led to extensive research in low-power VLSI design. As technology scales into deep sub-micron and nanometer regimes, power dissipation has become one of the most critical constraints in digital circuit design. Both dynamic and static power components significantly influence circuit performance, thermal behavior, and overall system reliability.

Decoders, being fundamental combinational circuits used in memory addressing and control logic, contribute notably to total power consumption due to their frequent usage and high switching activity. Therefore, optimizing decoder architectures has become an important research area. The literature presents a wide range of techniques for reducing power consumption, including logic optimization, transistor-level design improvements, and circuit-level power management strategies.

This chapter reviews the key research contributions relevant to low-power decoder design, focusing on logic optimization techniques, mixed-logic implementations, and power gating strategies.

2.2 Conventional CMOS Decoder Design

Traditional decoder circuits are implemented using complementary CMOS logic due to its robustness, noise immunity, and full-swing output characteristics. A standard 2-to-4 decoder requires approximately 20 transistors, while a 4-to-16 decoder typically requires more than 100 transistors when implemented using conventional CMOS structures.

Although CMOS designs provide reliable operation, they suffer from higher transistor count and increased capacitive loading, which leads to higher dynamic power consumption. Additionally, increased transistor density contributes to leakage currents, making static power a significant concern in scaled technologies.

These limitations have motivated researchers to explore alternative logic styles that can reduce transistor count and improve power efficiency.

2.3 Mixed-Logic Design Techniques

Mixed-logic design has emerged as an effective approach for optimizing digital circuits. This technique combines multiple logic styles, such as Transmission Gate Logic (TGL), Pass Transistor Logic (PTL), Dual-Value Logic (DVL), and Static CMOS, within a single circuit to exploit the advantages of each.

Transmission Gate Logic reduces the number of required transistors by allowing signals to pass directly through controlled switches. Dual-Value Logic further minimizes transistor usage by simplifying logic paths and reducing redundancy. Static CMOS is selectively used to restore signal levels and maintain full-swing outputs.

Research studies have demonstrated that mixed-logic decoder designs can significantly reduce transistor count and dynamic power consumption compared to conventional CMOS implementations. However, these designs must carefully address issues such as threshold voltage drop and signal degradation.

2.4 Power Dissipation Reduction Techniques

Several techniques have been proposed in the literature to reduce power consumption in CMOS circuits. These include:

- Voltage scaling: Reducing supply voltage to lower dynamic power
- Clock gating: Disabling clock signals to inactive circuit blocks
- Transistor sizing: Optimizing transistor dimensions to reduce capacitance
- Logic optimization: Minimizing switching activity and redundant operations

While these methods are effective, they often involve trade-offs in performance, complexity, or design overhead. Therefore, more efficient and practical techniques are required for modern low-power applications.

2.5 Power Gating Technique

Power gating is one of the most effective techniques for reducing static power dissipation in digital circuits. It involves inserting sleep transistors between the power supply and the circuit, creating a virtual power rail.

During active operation, the sleep transistor is turned ON, allowing normal circuit functionality. During idle conditions, the transistor is turned OFF, disconnecting the circuit from the power supply and significantly reducing leakage current.

Previous studies have shown that power gating can achieve substantial reduction in leakage power without affecting functional correctness. However, challenges such as wake-up delay, voltage drop, and sizing of sleep transistors must be carefully addressed.

2.6 Decoder Design Optimization

Decoder optimization has been widely explored using both circuit-level and architectural techniques. Hierarchical design approaches, such as predecoding, are commonly used to reduce complexity and improve scalability in larger decoders like 4-to-16 structures.

In predecoding architectures, inputs are divided into smaller groups and processed by lower-order decoders. The intermediate outputs are then combined to generate final outputs. This approach reduces fan-in, switching activity, and overall power consumption.

Additionally, optimized logic styles such as AND-NOR, NAND-NAND, and mixed-logic implementations have been proposed to further enhance efficiency.

2.7 Comparative Analysis of Existing Techniques

The literature indicates that no single technique can completely minimize power consumption. Instead, a combination of multiple approaches is required:

- CMOS designs provide reliability but suffer from higher power and area
- Mixed-logic designs reduce transistor count and dynamic power
- Power gating effectively reduces static power during idle conditions

Each technique has its own advantages and limitations. Therefore, integrating multiple approaches can lead to more efficient designs.

2.8 Research Gap

Despite significant advancements in low-power design, existing approaches often focus on either dynamic power reduction or static power reduction independently. Limited work has been done on combining transistor-level optimization with circuit-level power management techniques in decoder design.

Moreover, many advanced optimization methods increase design complexity and may not be practical for simple hardware implementations.

2.9 Contribution of the Present Work

To address the identified research gap, this work proposes a dual-approach strategy for low-power decoder design:

1. Mixed-Logic Optimization: Reduces transistor count and dynamic power by integrating TGL, DVL, and Static CMOS logic styles.
2. Power Gating Technique: Reduces static power by disconnecting the circuit during idle conditions using a sleep transistor.

The combination of these two approaches provides a balanced solution for minimizing both dynamic and static power consumption.

Simulation results demonstrate that the power-gated decoder achieves approximately 40% reduction in power compared to the conventional design, validating the effectiveness of the proposed methodology.

2.10 Summary

This chapter reviewed various techniques for low-power VLSI design, with a focus on decoder circuits. Conventional CMOS designs, mixed-logic implementations, and power gating techniques were discussed along with their advantages and limitations.

The review highlights the need for integrated design strategies that address both dynamic and static power components. Based on these insights, the proposed work combines mixed-logic optimization and power gating to achieve improved efficiency in decoder circuits.

CHAPTER 3

SYSTEM REQUIREMENTS AND OVERALL ARCHITECTURE.

The proposed system is designed as a low-power digital decoder architecture that focuses on reducing power consumption and improving energy efficiency rather than only implementing logical functionality. The design is driven by the need to minimize leakage power and switching losses in modern VLSI circuits. Instead of concentrating only on logic realization, the system integrates power-aware techniques such as mixed-logic optimization and power gating, ensuring that the circuit operates efficiently under both active and idle conditions. The objective is to achieve correct decoding while maintaining reduced power dissipation and improved overall performance.

The system considers the implementation of 2:4 and 4:16 decoders, where the 2:4 decoder acts as the fundamental building block and the 4:16 decoder is realized using a hierarchical structure. The architecture ensures that only one output is active for a given input combination while minimizing unnecessary switching activity. To further enhance efficiency, a sleep transistor (header PMOS) is introduced to disconnect the circuit from the power supply during idle conditions. This reduces leakage current and contributes to overall power savings.

3.1 Functional Requirements

The primary functional requirement of the system is accurate decoding of input signals. The 2:4 decoder must generate four outputs based on two input variables, ensuring that

only one output is active at a time. Similarly, the 4:16 decoder must correctly generate sixteen outputs using a combination of multiple 2:4 decoder blocks.

Another key requirement is power-efficient operation. The system must support two modes of operation:

- Active mode: normal decoding operation
- Sleep mode: circuit disconnected from supply to reduce leakage power

The transition between these modes must be smooth and should not affect output correctness.

The system must also ensure stable and glitch-free outputs, maintaining correct logic levels under all input conditions. Additionally, the design should support scalability, allowing extension to larger decoder circuits without significant modification.

3.2 Non-Functional Requirements and Constraints

In addition to functional requirements, the system must satisfy several non-functional constraints. The design should be simple, cost-effective, and easy to implement using CMOS-based logic in LTspice. The system must ensure low power consumption by minimizing both dynamic and static power components.

Reliability is another important requirement. The circuit must operate correctly under different input combinations without instability. The design should also be modular, allowing reuse of the 2:4 decoder block in constructing larger decoders such as the 4:16 decoder.

3.3 System Architecture Overview

The overall architecture follows a hierarchical and modular design approach. At the base level, a 2:4 decoder is implemented as the core unit. Multiple 2:4 decoder blocks are combined to form a 4:16 decoder, where higher-order inputs enable specific decoder sections.

To incorporate low-power functionality, a header PMOS transistor is placed between the power supply (VDD) and the circuit, creating a virtual supply node. This transistor is controlled by a sleep signal.

During active mode, the transistor is ON, allowing normal circuit operation. During sleep mode, the transistor is OFF, disconnecting the circuit from the power supply and reducing leakage power. This architecture ensures efficient power management while maintaining correct decoding behavior.

3.4 Block Diagrams

3.4.1 Block Diagram of 2:4 Decoder

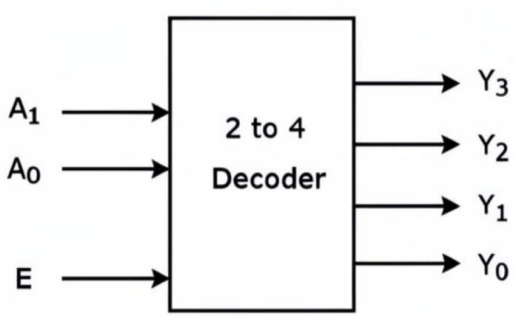

Enable	Inputs		Outputs			
E	A_1	A_0	Y_3	Y_2	Y_1	Y_0
0	x	x	0	0	0	0
1	0	0	0	0	0	1
1	0	1	0	0	1	0
1	1	0	0	1	0	0
1	1	1	1	0	0	0

The 2:4 decoder takes two input signals and generates four output lines. Only one output is active at a time based on the input combination. This block forms the fundamental unit of the overall system.

3.4.2 Block Diagram of 4:16 Decoder

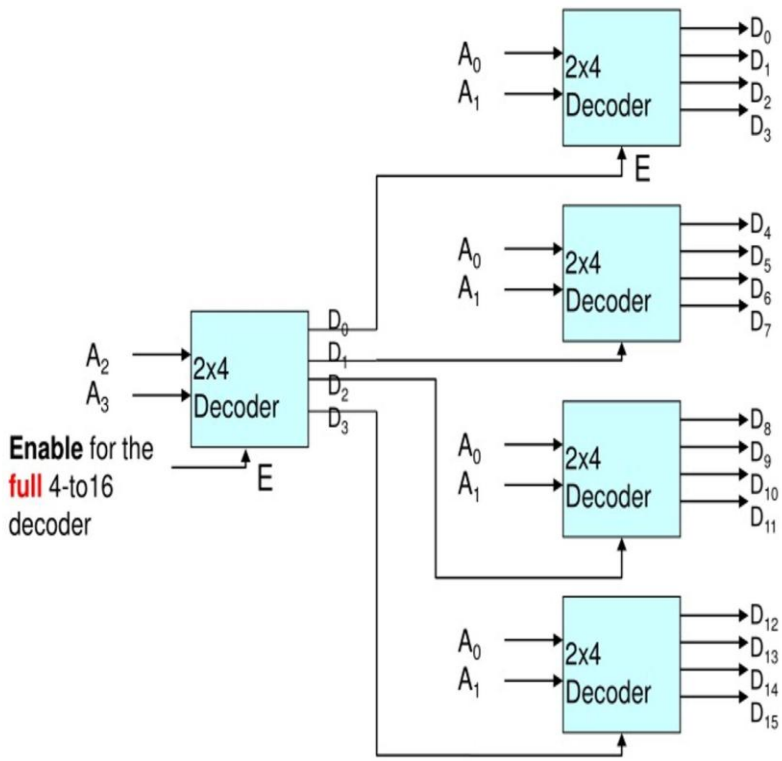

The 4:16 decoder is implemented using multiple 2:4 decoder blocks in a hierarchical structure. The higher-order inputs are used to enable specific decoder sections, while the lower-order inputs determine the final output. This approach reduces complexity and improves scalability.

3.4.3 Block Diagram of Mixed-Logic Decoder

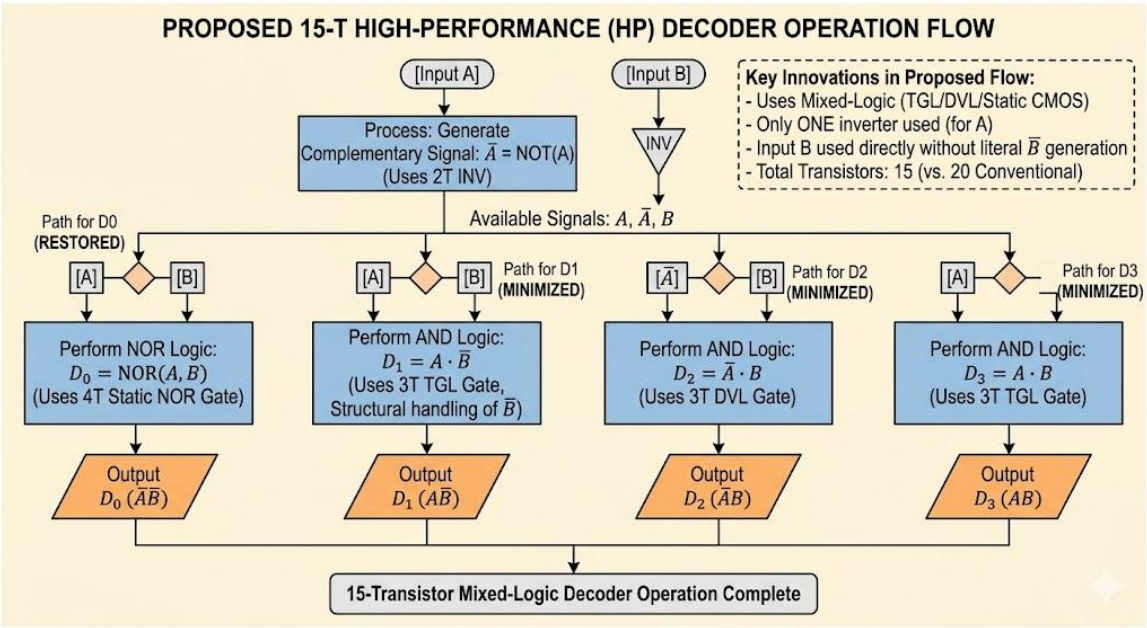

The mixed-logic decoder integrates Transmission Gate Logic (TGL), Dual-Value Logic (DVL), and Static CMOS. This structure reduces transistor count and switching activity while maintaining full-swing outputs.

3.4.4 Block Diagram of Power-Gated Decoder

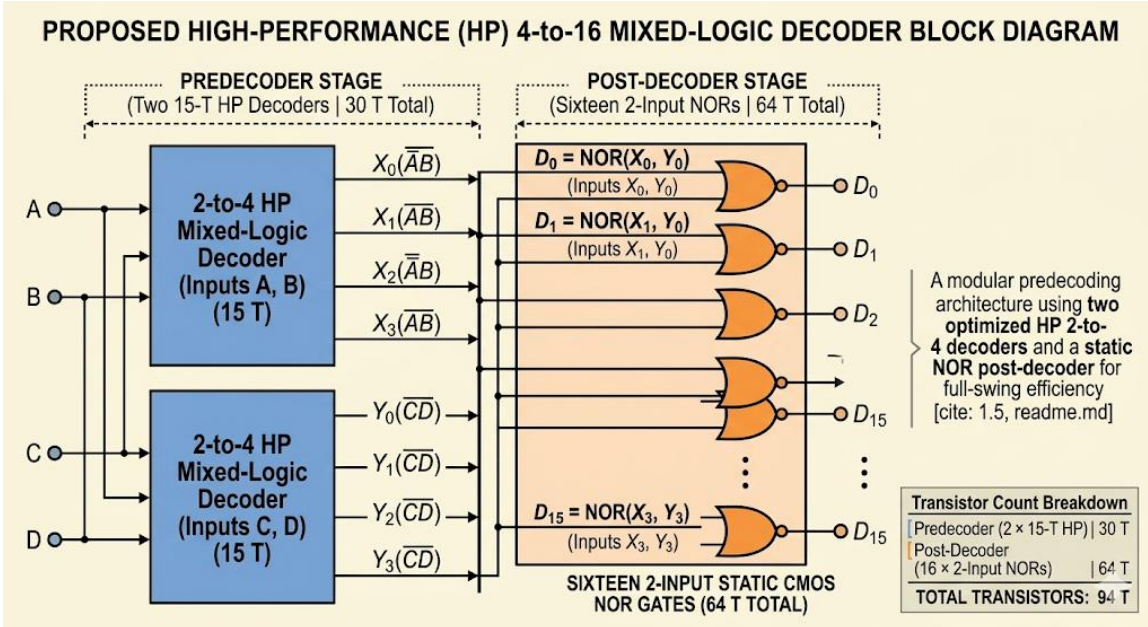

The power-gated decoder includes a header PMOS sleep transistor between VDD and the circuit. This transistor controls the power supply to the decoder, enabling low-leakage operation during idle conditions. This architecture ensures efficient power management while maintaining correct decoding behavior.

3.5 Chapter Summary

This chapter described the system requirements and overall architecture of the proposed low-power decoder design. The system combines hierarchical design, mixed-logic optimization, and power gating techniques to achieve efficient operation. Block diagrams of the 2:4 decoder, 4:16 decoder, mixed-logic structure, and power-gated architecture provide a clear understanding of the system design.

CHAPTER 4

IMPLEMENTATION AND ANALYSIS

4.1 Introduction

Technology Model (PTM) low-power technology at a supply This chapter presents the implementation and performance analysis of low-power decoder circuits using two complementary approaches: mixed-logic optimization and power gating. The objective is to reduce power consumption and transistor count while ensuring correct decoding operation and full-swing output behavior.

All designs are implemented and simulated using LTspice with 32 nm Predictive voltage of 1.0 V. Transient analysis is used to verify functionality and evaluate power consumption.

4.2 Mixed-Logic Decoder Implementation

The mixed-logic approach integrates Transmission Gate Logic (TGL), Dual-Value Logic (DVL), and Static CMOS to achieve an optimized decoder architecture. The 2-to-4 decoder is designed using only 15 transistors instead of the conventional 20-transistor CMOS structure. This reduction is achieved by eliminating redundant complementary paths and directly utilizing input signals.

A Static CMOS NOR gate is used in the critical path to restore signal integrity and ensure full-swing outputs. The remaining outputs are implemented using compact TGL and DVL structures, reducing parasitic capacitance and switching activity. This architecture ensures efficient power utilization while maintaining correct logical functionality.

The 4-to-16 decoder is implemented using a hierarchical predecoding structure. Two optimized 2-to-4 decoder blocks are used as predecoders, followed by a post-decoder stage consisting of sixteen 2-input CMOS gates. This approach reduces overall complexity and improves scalability. This architecture ensures efficient operation with reduced transistor count and controlled switching behavior.

4.3 Power-Gated Decoder Implementation

The power gating approach focuses on reducing static power dissipation by introducing a header PMOS sleep transistor between the power supply and the decoder circuit. This creates a controllable power path that can disconnect the circuit during idle conditions.

During active operation, the sleep transistor remains ON, allowing normal circuit functionality. During idle periods, the transistor is turned OFF, effectively reducing leakage current and minimizing static power loss. This architecture ensures efficient power management while maintaining correct decoding behavior.

4.4 Simulation and Measurement

Transient simulations are performed in LTspice by applying input sequences to cover all decoding states. The average power consumption is measured using the supply current.

The conventional decoder exhibits an average power consumption of approximately 5.27×10^{-7} W. After applying power gating, the average power reduces to approximately 3.118×10^{-7} W.

4.5 Results and Discussion

The power reduction achieved through power gating is calculated as:

$$\text{Reduction (\%)} = [(5.27 - 3.118) / 5.27] \times 100 \approx 40.83\%$$

This result confirms that power gating significantly reduces leakage power in decoder circuits. The mixed-logic design further contributes by reducing transistor count and switching activity.

The combined use of both techniques provides an effective low-power solution. Mixed-logic optimization reduces dynamic power and area, while power gating minimizes static power. This integrated approach ensures improved energy efficiency without compromising functional correctness.

4.6 Simulation Results and Waveforms

This section presents the simulation results and output waveforms obtained from LTspice for the proposed decoder designs. The results verify the correct logical operation and demonstrate the effectiveness of the low-power techniques implemented.

FOR 2-to-4 decoder : (Mixed-Logic Decoder)

Graphs:

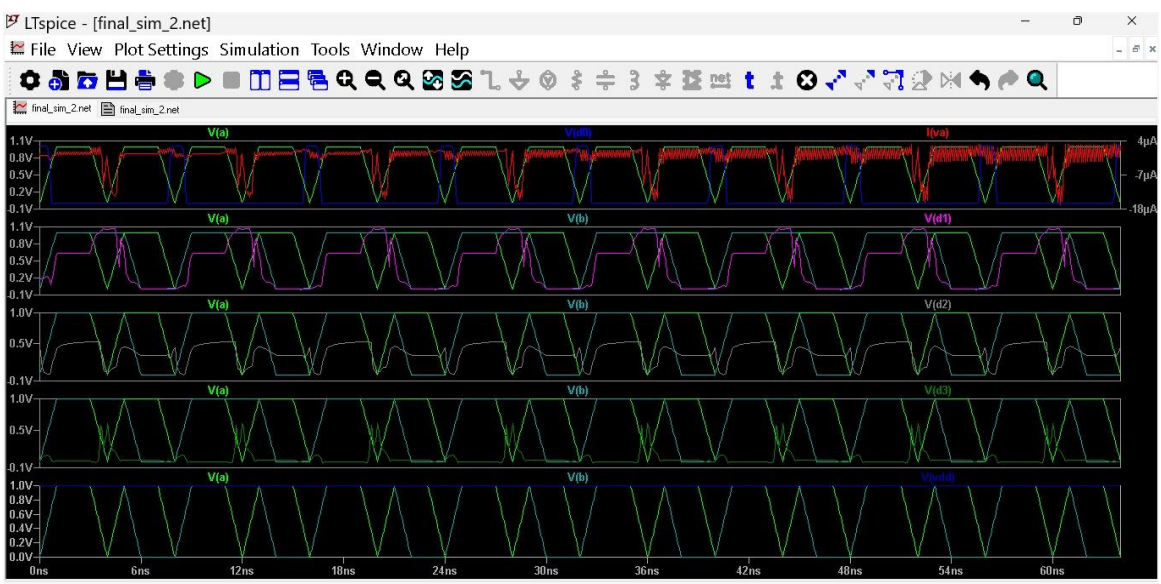

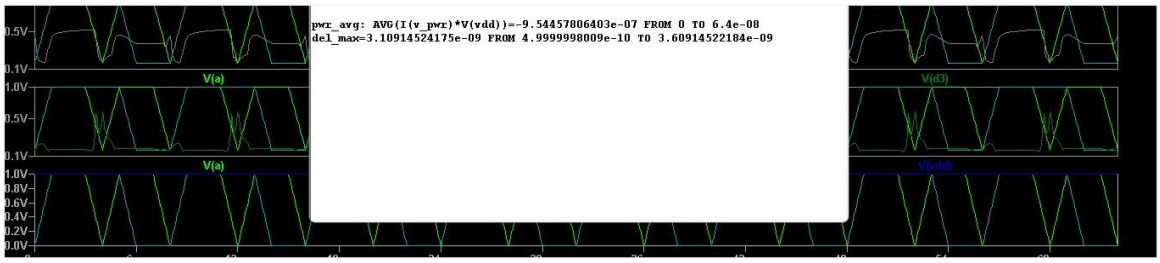

FOR 4-to-16 decoder :

Graphs:

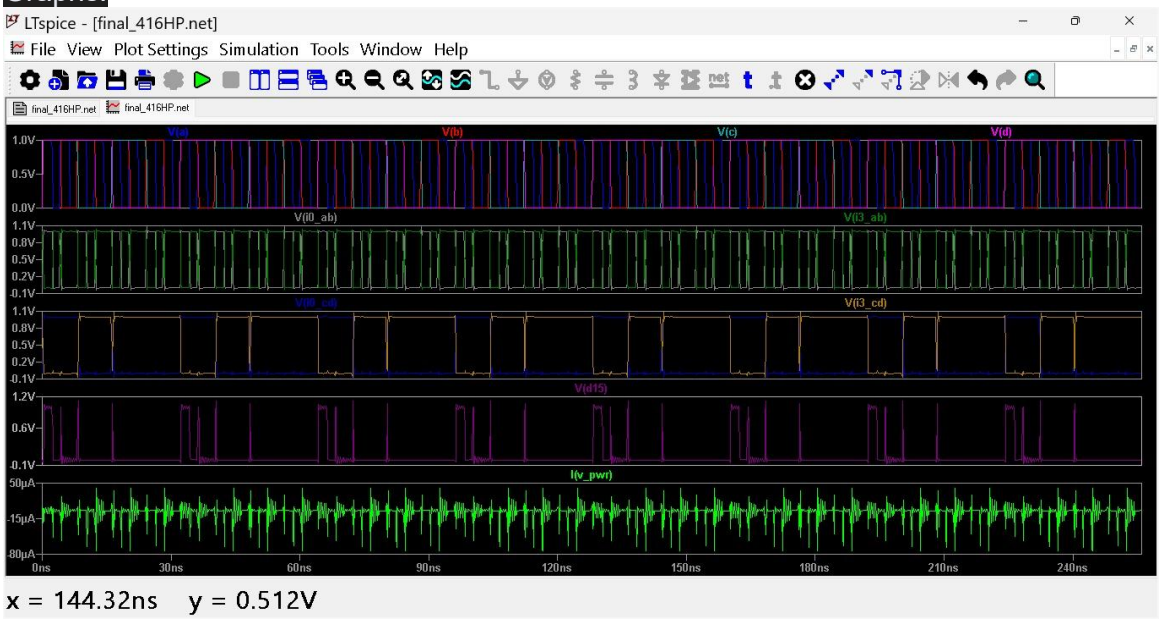

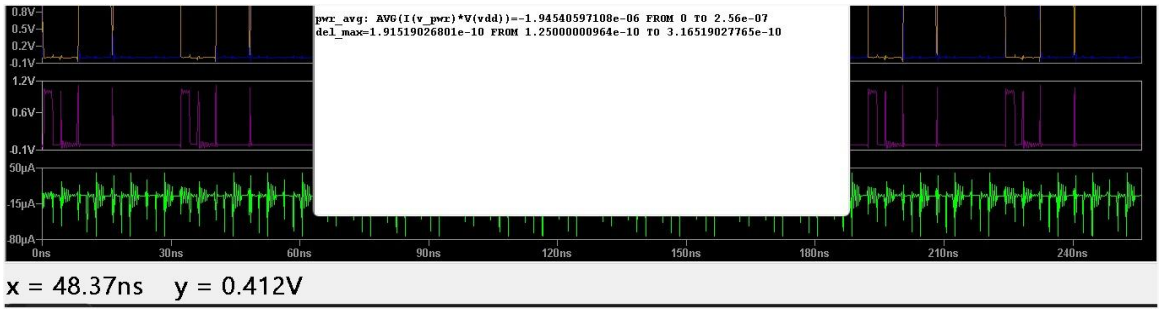

FOR 2-to-4 decoder : (Power-Gated Decoder)

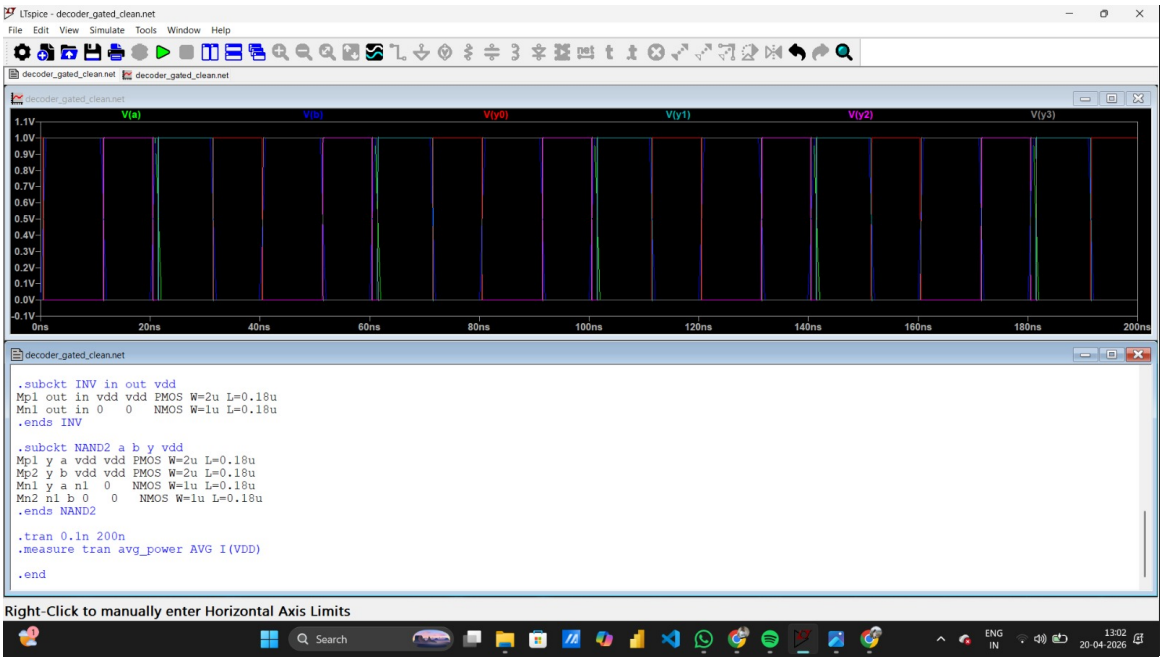

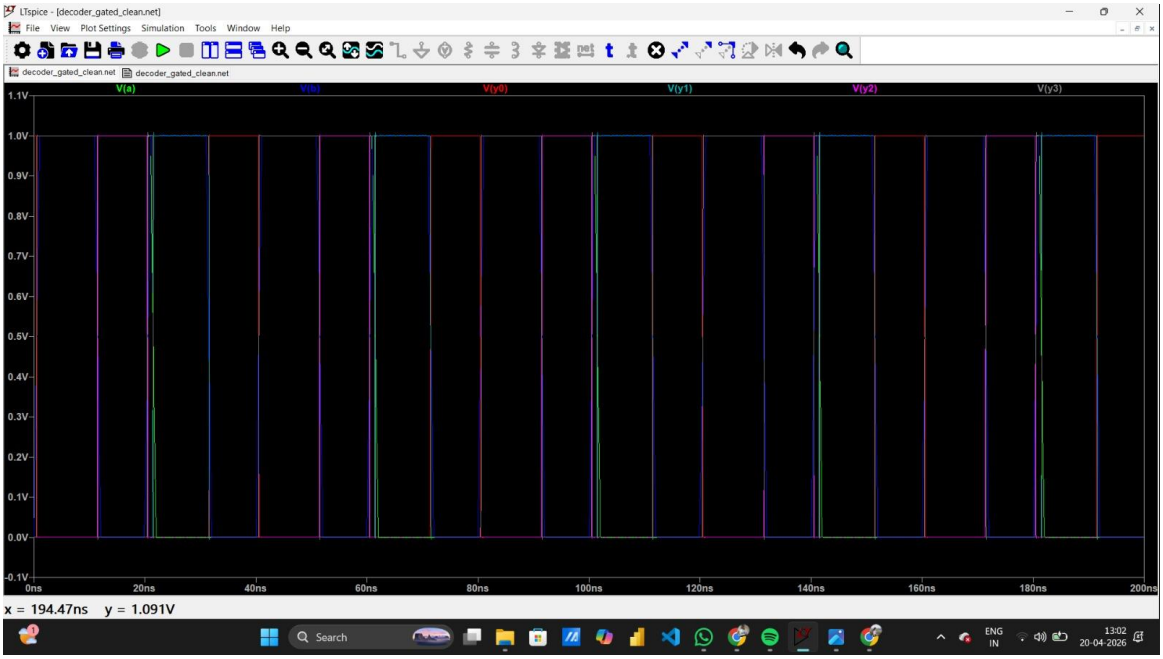

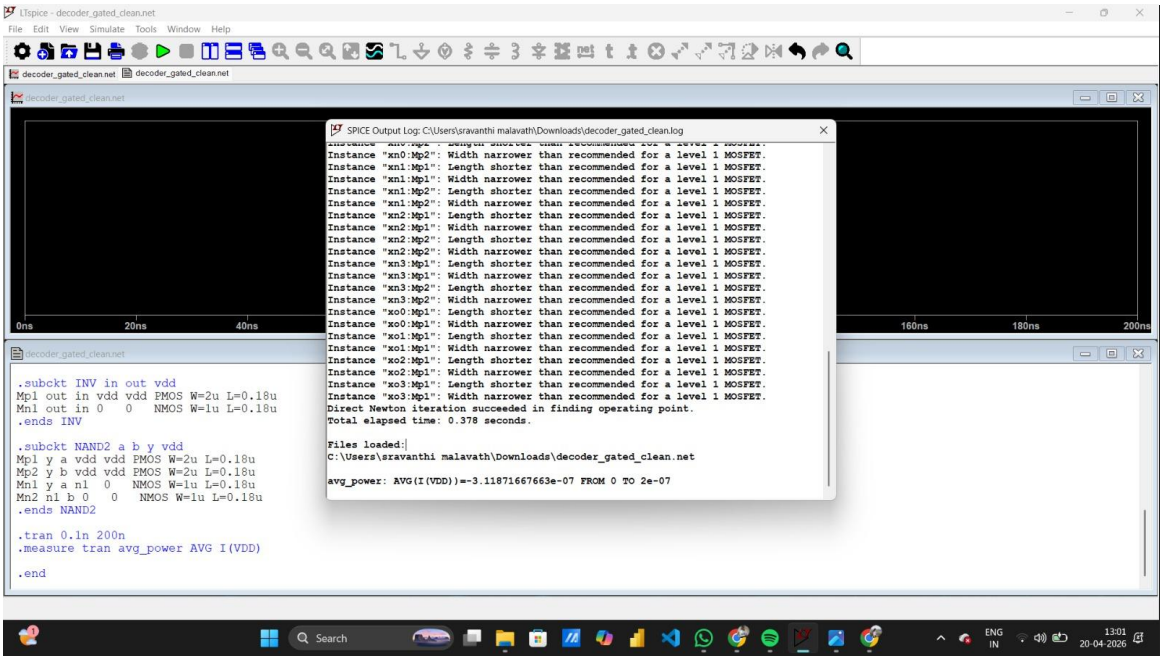
LTspice - decoder_gated_clean.net
File Edit View Simulate Tools Window Help
decoder_gated_clean.net
SPICE Output Log: C:\Users\sravanthi malavath\Downloads\decoder_gated_clean.log
Instance "xn0:Mp2": Width narrower than recommended for a level 1 MOSFET.
Instance "xn1:Mp1": Length shorter than recommended for a level 1 MOSFET.
Instance "xn1:Mp1": Width narrower than recommended for a level 1 MOSFET.
Instance "xn1:Mp2": Length shorter than recommended for a level 1 MOSFET.
Instance "xn1:Mp2": Width narrower than recommended for a level 1 MOSFET.
Instance "xn2:Mp1": Length shorter than recommended for a level 1 MOSFET.
Instance "xn2:Mp1": Width narrower than recommended for a level 1 MOSFET.
Instance "xn2:Mp2": Length shorter than recommended for a level 1 MOSFET.
Instance "xn2:Mp2": Width narrower than recommended for a level 1 MOSFET.
Instance "xn3:Mp1": Length shorter than recommended for a level 1 MOSFET.
Instance "xn3:Mp1": Width narrower than recommended for a level 1 MOSFET.
Instance "xn3:Mp2": Length shorter than recommended for a level 1 MOSFET.
Instance "xn3:Mp2": Width narrower than recommended for a level 1 MOSFET.
Instance "xo0:Mp1": Length shorter than recommended for a level 1 MOSFET.
Instance "xo0:Mp1": Width narrower than recommended for a level 1 MOSFET.
Instance "xo1:Mp1": Length shorter than recommended for a level 1 MOSFET.
Instance "xo1:Mp1": Width narrower than recommended for a level 1 MOSFET.
Instance "xo2:Mp1": Length shorter than recommended for a level 1 MOSFET.
Instance "xo2:Mp1": Width narrower than recommended for a level 1 MOSFET.
Instance "xo3:Mp1": Length shorter than recommended for a level 1 MOSFET.
Instance "xo3:Mp1": Width narrower than recommended for a level 1 MOSFET.
Direct Newton iteration succeeded in finding operating point.
Total elapsed time: 0.378 seconds.
Files loaded:
C:\Users\sravanthi malavath\Downloads\decoder_gated_clean.net
avg_power: AVG(I(VDD))=-3.11871667663e-07 FROM 0 TO 2e-07
0ns 20ns 40ns 160ns 180ns 200ns
.subckt INV in out vdd
Mp1 out in vdd vdd PMOS W=2u L=0.18u
Mn1 out in 0 0 NMOS W=1u L=0.18u
.ends INV
.subckt NAND2 a b y vdd
Mp1 y a vdd vdd PMOS W=2u L=0.18u
Mp2 y b vdd vdd PMOS W=2u L=0.18u
Mn1 y a n1 0 NMOS W=1u L=0.18u
Mn2 n1 b 0 0 NMOS W=1u L=0.18u
.ends NAND2
.tran 0.1n 200n
.measure tran avg_power AVG I(VDD)
.end
Search
ENG IN
13:01 20-04-2026

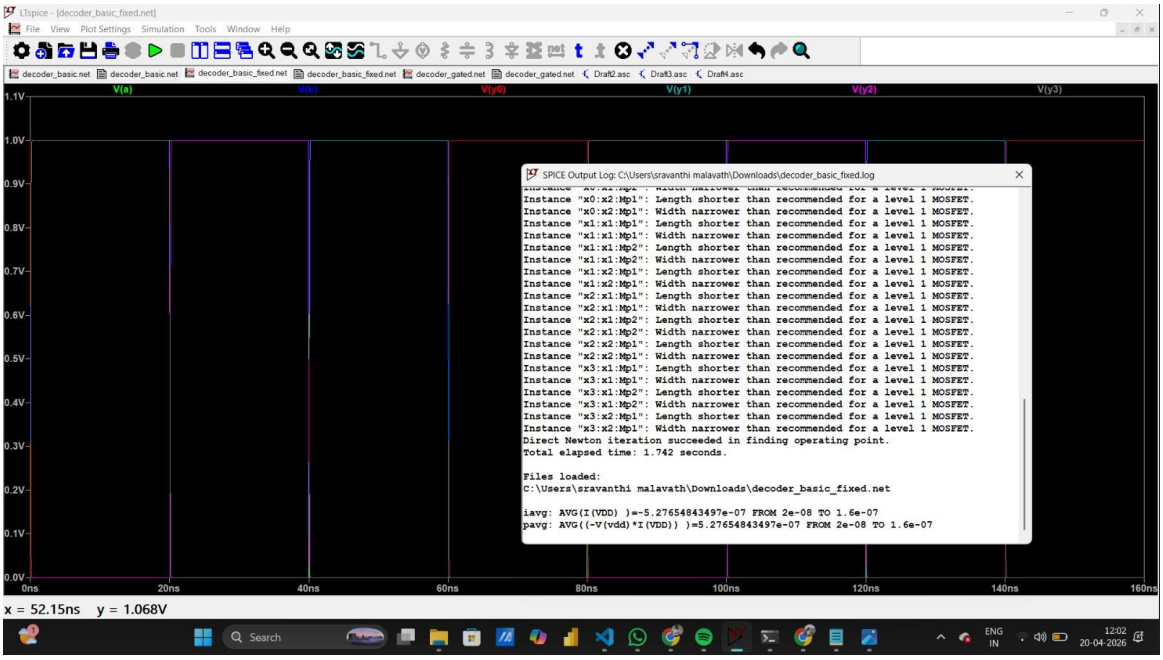
LTspice - [decoder_basic_fixed.net]
File View Plot Settings Simulation Tools Window Help
decoder_basic.net decoder_basic.net decoder_basic_fixed.net decoder_basic_fixed.net decoder_gated.net decoder_gated.net Draft2.asc Draft3.asc Draft4.asc
V(a) V(b) V(y0) V(y1) V(y2) V(y3)
1.1V 1.0V 0.9V 0.8V 0.7V 0.6V 0.5V 0.4V 0.3V 0.2V 0.1V 0.0V
SPICE Output Log: C:\Users\sravanthi malavath\Downloads\decoder_basic_fixed.log
Instance "x0:x2:Mp1": Width narrower than recommended for a level 1 MOSFET.
Instance "x1:x1:Mp1": Length shorter than recommended for a level 1 MOSFET.
Instance "x1:x1:Mp1": Width narrower than recommended for a level 1 MOSFET.
Instance "x1:x1:Mp2": Length shorter than recommended for a level 1 MOSFET.
Instance "x1:x1:Mp2": Width narrower than recommended for a level 1 MOSFET.
Instance "x1:x2:Mp1": Length shorter than recommended for a level 1 MOSFET.
Instance "x1:x2:Mp1": Width narrower than recommended for a level 1 MOSFET.
Instance "x2:x1:Mp1": Length shorter than recommended for a level 1 MOSFET.
Instance "x2:x1:Mp1": Width narrower than recommended for a level 1 MOSFET.
Instance "x2:x1:Mp2": Length shorter than recommended for a level 1 MOSFET.
Instance "x2:x1:Mp2": Width narrower than recommended for a level 1 MOSFET.
Instance "x2:x2:Mp1": Length shorter than recommended for a level 1 MOSFET.
Instance "x2:x2:Mp1": Width narrower than recommended for a level 1 MOSFET.
Instance "x3:x1:Mp1": Length shorter than recommended for a level 1 MOSFET.
Instance "x3:x1:Mp1": Width narrower than recommended for a level 1 MOSFET.
Instance "x3:x1:Mp2": Length shorter than recommended for a level 1 MOSFET.
Instance "x3:x1:Mp2": Width narrower than recommended for a level 1 MOSFET.
Instance "x3:x2:Mp1": Length shorter than recommended for a level 1 MOSFET.
Instance "x3:x2:Mp1": Width narrower than recommended for a level 1 MOSFET.
Direct Newton iteration succeeded in finding operating point.
Total elapsed time: 1.742 seconds.
Files loaded:
C:\Users\sravanthi malavath\Downloads\decoder_basic_fixed.net
iavg: AVG(I(VDD))=-5.27654843497e-07 FROM 2e-08 TO 1.6e-07
pavg: AVG((-V(vdd)*I(VDD)))=5.27654843497e-07 FROM 2e-08 TO 1.6e-07
0ns 20ns 40ns 60ns 80ns 100ns 120ns 140ns 160ns
x = 52.15ns y = 1.068V
Search
ENG IN
12:02 20-04-2026

4.7 Chapter Summary

This chapter presented the implementation and analysis of low-power decoder circuits using mixed-logic and power gating techniques. The results demonstrate that the proposed approaches achieve significant power reduction and efficient operation. The design ensures reduced transistor count, controlled switching activity, and improved overall performance, making it suitable for modern low-power VLSI applications.

CHAPTER 5

RESULTS AND DISCUSSION

5.1 Introduction

This chapter presents the simulation results and discusses the performance of the proposed low-power decoder designs. The evaluation focuses on comparing conventional CMOS decoders with the proposed mixed-logic and power-gated implementations. The analysis considers key parameters such as power consumption, transistor count, and overall efficiency.

5.2 Mixed-Logic Decoder Results

The mixed-logic implementation of the 2-to-4 decoder achieves a significant reduction in transistor count, using only 15 transistors compared to 20 in conventional CMOS design. This reduction directly contributes to lower parasitic capacitance and reduced switching activity.

For the 4-to-16 decoder, the hierarchical predecoding architecture reduces the total transistor count to 94, compared to 104 in the conventional implementation. This optimized structure ensures efficient operation while maintaining correct decoding functionality.

The reduction in transistor count improves area efficiency and contributes to lower dynamic power consumption. Full-swing output levels are preserved using CMOS restoration stages, ensuring reliable circuit operation.

5.3 Power-Gated Decoder Results

The power gating approach demonstrates a significant improvement in power efficiency by reducing leakage power. The conventional decoder consumes approximately 5.27×10^{-7} W, whereas the power-gated decoder consumes approximately 3.118×10^{-7} W under the same simulation conditions.

This corresponds to an approximate 40% reduction in power consumption. The reduction is primarily achieved by disconnecting the circuit from the power supply during inactive periods using a header PMOS sleep transistor.

The results confirm that power gating is highly effective in minimizing static power without affecting logical correctness.

5.4 Comparative Discussion

The results indicate that both approaches contribute to power optimization in different ways. The mixed-logic design reduces transistor count and switching activity, leading to lower dynamic power. On the other hand, the power gating technique effectively reduces leakage power during idle conditions.

When combined, these approaches provide a balanced and efficient solution for low-power decoder design. The mixed-logic structure ensures compact implementation, while power gating enhances energy efficiency at the circuit level.

This combined methodology ensures improved performance, reduced power consumption, and scalability for larger digital systems.

5.5 Key Observations

- Mixed-logic design achieves significant reduction in transistor count
- Switching activity is reduced due to optimized logic paths
- Power gating reduces leakage power by approximately 40%
- Full-swing operation is maintained in all designs
- Both techniques complement each other in achieving low-power design

5.6 Chapter Summary

This chapter presented the results and discussion of the proposed decoder designs. The mixed-logic approach improves area and dynamic power efficiency, while power gating significantly reduces static power. The results demonstrate that the combined use of these techniques provides an effective solution for designing low-power and high-performance decoder circuits suitable for modern VLSI applications.

CHAPTER 6

CONCLUSION AND FUTURE SCOPE

6.1 Conclusion

This thesis presented the design and analysis of low-power decoder circuits using two complementary approaches: mixed-logic optimization and power gating. The primary objective was to reduce power consumption and transistor count while maintaining correct logical functionality and reliable operation.

The mixed-logic approach integrates Transmission Gate Logic (TGL), Dual-Value Logic (DVL), and Static CMOS to achieve an optimized decoder architecture. This method successfully reduces transistor count and switching activity, leading to improved area efficiency and lower dynamic power consumption. The hierarchical implementation of the 4-to-16 decoder further enhances scalability and reduces overall design complexity.

The power gating approach addresses static power dissipation by introducing a header PMOS sleep transistor. This technique effectively disconnects the circuit during idle conditions, significantly reducing leakage current. Simulation results demonstrate that the power-gated decoder achieves approximately 40% reduction in power consumption compared to the conventional CMOS design.

The combined use of mixed-logic optimization and power gating provides a balanced solution for low-power VLSI design. The proposed designs ensure reduced power consumption, efficient transistor utilization, and full-swing output operation, making them suitable for modern digital systems.

6.2 Future Scope

Although the proposed approaches provide significant improvements, further enhancements can be explored to extend this work:

- Integration of both mixed-logic and power gating in a single unified decoder design for maximum power efficiency
- Extension of the methodology to larger and more complex digital circuits such as multiplexers, ALUs, and memory systems
- Exploration of advanced device technologies such as FinFETs and multi-threshold CMOS (MTCMOS) for improved leakage control
- Implementation of dynamic power reduction techniques such as clock gating and voltage scaling
- Investigation of delay optimization techniques to improve performance in mixed-logic designs
- Application of AI-based or optimization algorithms for automated low-power circuit design

The continued development of such techniques will contribute to more efficient, scalable, and reliable VLSI systems in future electronic applications.

References

[1] D. Balobas and N. Konofaos, "Design of Low Power, High Performance 2-4 and 4-16 Mixed-Logic Line Decoders," IEEE Transactions on Circuits and Systems II: Express Briefs, vol. 64, no. 2, pp. 201-205, Feb. 2017. doi: 10.1109/TCSII.2016.2555020.

[2] N. H. E. Weste and D. M. Harris, "CMOS VLSI Design: A Circuits and Systems Perspective," 4th ed. Boston, MA, USA: Addison-Wesley, 2011.

[3] W. Zhao and Y. Cao, "New generation of Predictive Technology Model (PTM) for sub-45nm design exploration," IEEE Transactions on Electron Devices, vol. 53, no. 11, pp. 2816-2823, Nov. 2006.

[4] Predictive Technology Model (PTM). [Online]. Available: http://ptm.asu.edu/